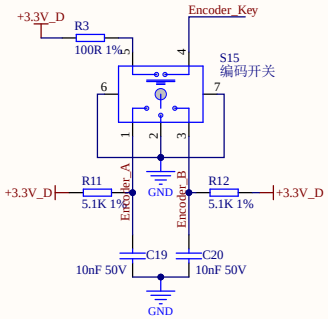


# 蜂鸣器

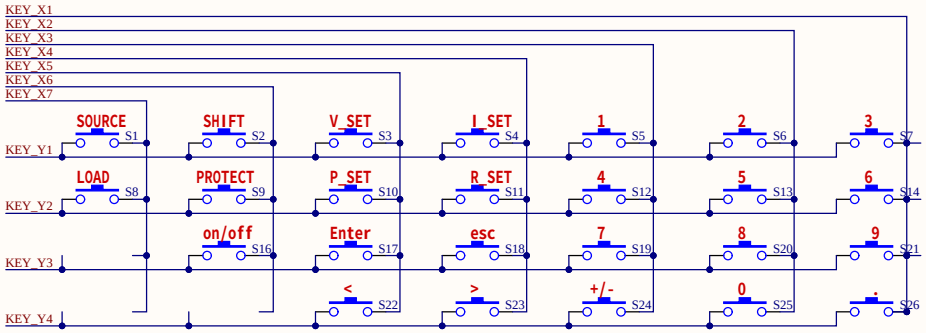


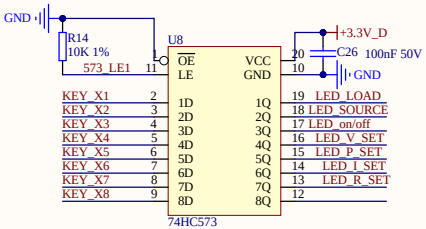


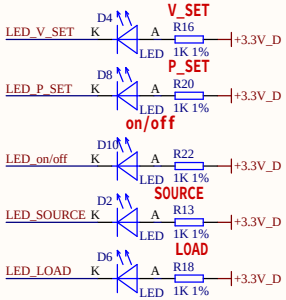


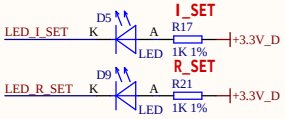


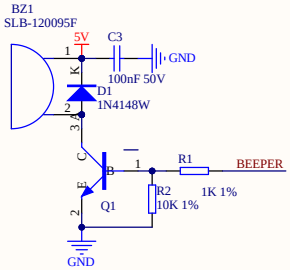


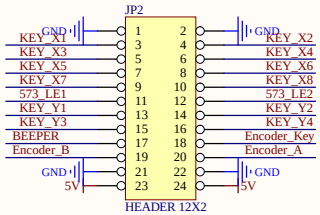


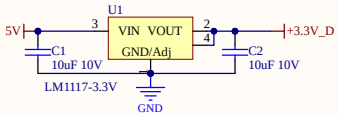


| Title | | |
|---|---|---|
| Size A3 | Number | Revision |
| Date: 3/12/2026 | | Sheet of |
| File: F:\UNIT 项目\..\1U 按键.SchDoc | | Drawn By: |